SR-8-AN ACOUSTIC SYSTEM

K.C.S.

KELONIK CINEMA SOUND

Surround channel cinema sound system

SR-8-AN system is specifically designed for two-way surround channel sound, providing high dynamics and fidelity for a perfect play back of cinema soundtracks.

SR-8-AN system's cabinet has a high frequency driver with 1" Ø dome, and one 8" Ø woofer.

Crossover is passive-type, with 2,500 Hz cut frequency.

SR-8-AN ACOUSTIC SYSTEM

Mount SP SR-8-A

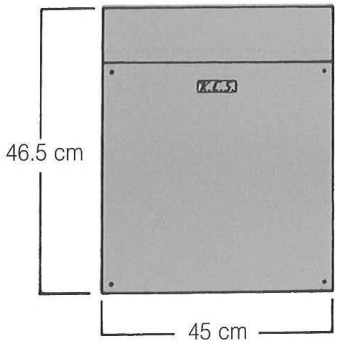

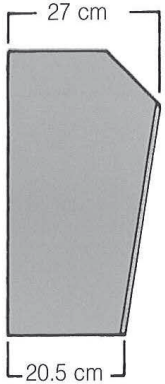

TECHNICAL DATA

Frequancy Range (-10 dB)	40 Hz- 20 kHz
Nominal Impedance	8 Ω
POWER CAPACITY	
Continuous Pink Noise (1)	125 W
Continuous Program	250 W
Sensitivity 1W/1m	91 dB S.P.L.
Crossover Frequency	2500 Hz
Horizontal Beamwidth	100º
Vertical Beamwidth	100º
Dimensions (H x W x D)	46,5 x 45 x 27 cm
Net Weight	13 kg

(1) Based on a 2 hour test using a continuous 6 dB crest factor pink noise signal band limited according to IEC 268-1 (1985).

COMPONENTS

Cabinet	SR-8-A
Low Frequency Driver	8-GU
Passive Crossover	F-SR-8AN
High Frequency Tweeter	TWT-8K